CONTRACT NO. 60D30

F.A.P. RTE.	SECTION	COUNTY	TOTAL SHEETS	SHEET NO.
338	114 B-I	WILL	15	14
STA.		TO STA.		
FED. ROAD DIST. NO.	ILLINOIS	FED. AID PROJECT		

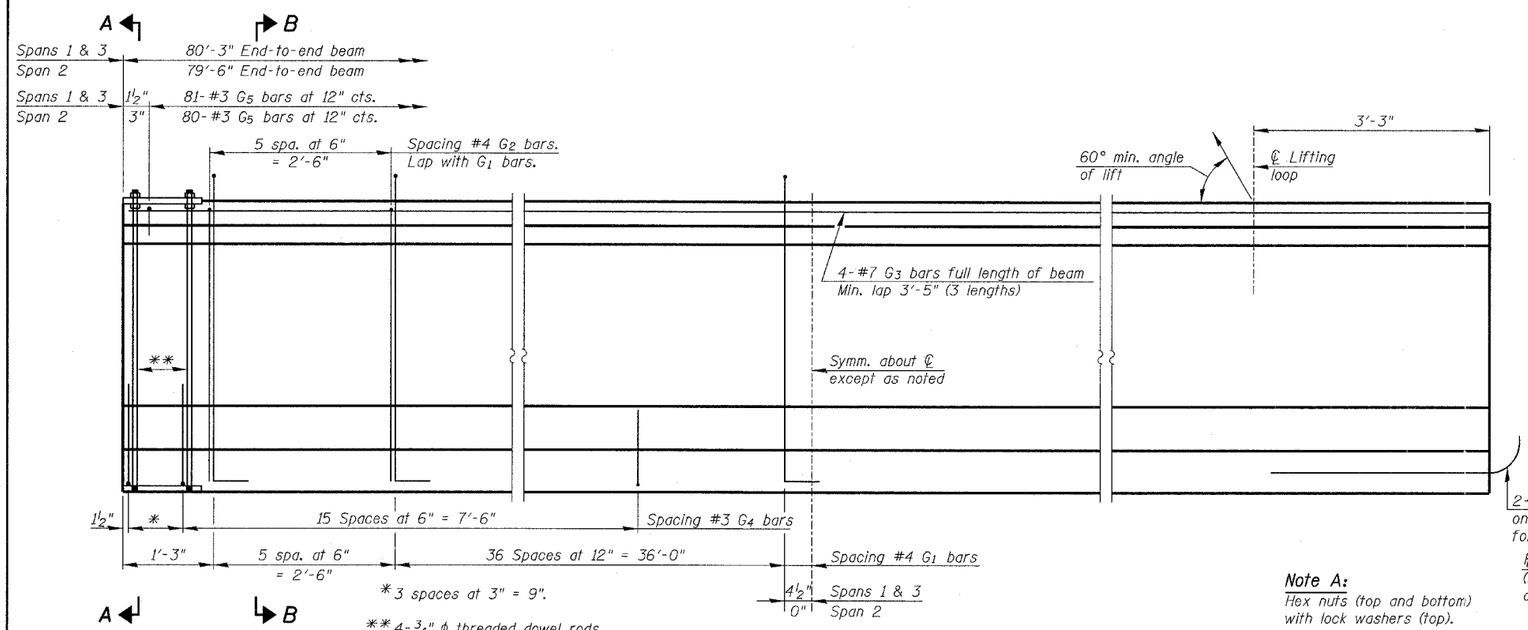

ELEVATION OF BEAM
(Showing reinforcement & dimensions)

2-#8 G6 bars at pier only. (See DWG S-15 for details).

PL 1" x 1'-1" x 1'-10" (Bevel to match chamfer).

Note A:
Hex nuts (top and bottom) with lock washers (top). Only tighten sufficiently to compress lock washers.

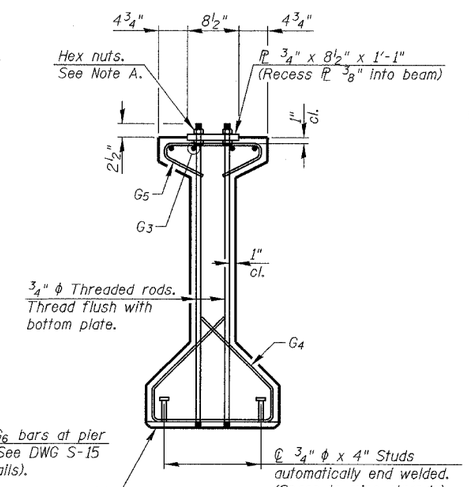

SECTION A-A

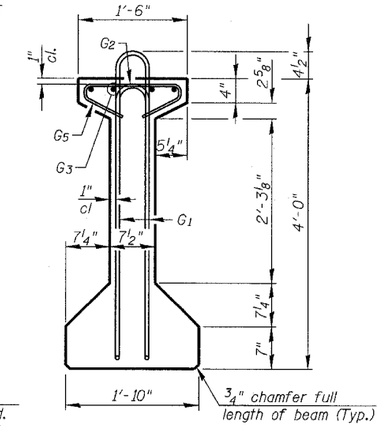

SECTION B-B

BAR LIST
ONE BEAM ONLY
(At Spans 1 or 3)

Bar	No.	Size	Length	Shape
G_1	84	#4	9'-6"	
G_2	12	#4	7'-11"	
G_3	12	#7	30'-1"	
G_4	38	#3	5'-3"	
G_5	81	#3	2'-9"	
G_6	2	#8	3'-9"	

BAR LIST
ONE BEAM ONLY
(At Span 2)

Bar	No.	Size	Length	Shape
G_1	83	#4	9'-6"	
G_2	12	#4	7'-11"	
G_3	12	#7	28'-9"	
G_4	38	#3	5'-3"	
G_5	80	#3	2'-9"	
G_6	4	#8	3'-9"	

Notes:

See DWG. S-15 for additional details and Bill of Material.

Required release strength, f'ci, shall be 5000 psi.

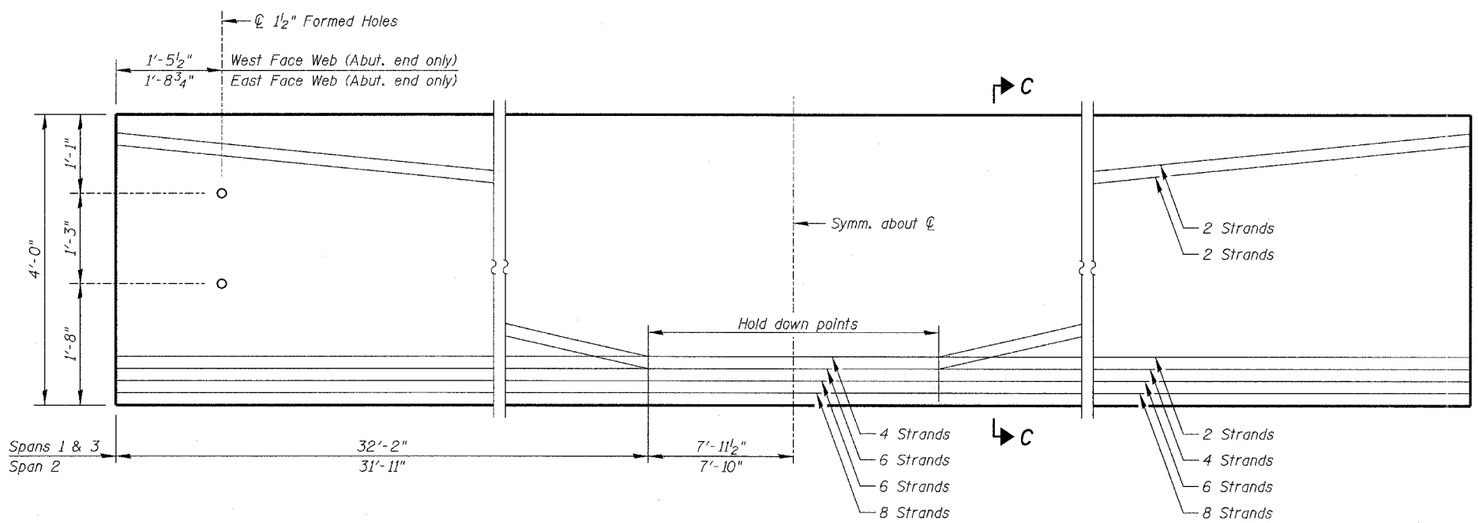

ELEVATION OF BEAM
(Showing prestressing steel)

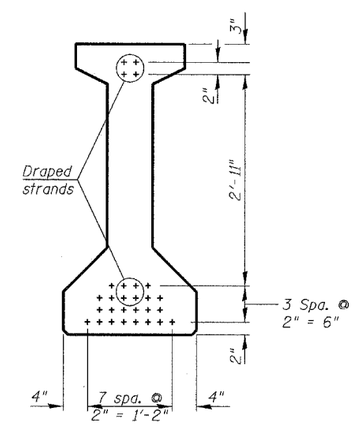

SECTION C-C

SHT. S-14 of 15

REVISIONS	
NAME	DATE

ILLINOIS DEPARTMENT OF TRANSPORTATION
48" PPC I-BEAM
ILLINOIS ROUTE 59 OVER DuPAGE RIVER
FAP ROUTE 338 SECTION 114 B-I
WILL COUNTY
STATION 3209+85.00
STRUCTURE NUMBER 099-0339

SCALE: NONE DESIGNED BY: SB DRAWN BY: TL
DATE: 06/29/07 CHECKED BY: WPM CHECKED BY: SB

KNIGHT
Engineers & Architects

FILE: L:\6632.02\Cad\Sheets\Roadway Structures\Bridge\663202-50339-BM02.dgn