Notes:
See Sheet 6 of 27 for Detail A and View B-B.
Approach slab and parapet concrete shall be paid for as Concrete Superstructure.
Approach footing concrete shall be paid for as Concrete Structures.
Reinforcement shall be paid for as Reinforcement Bars, Epoxy Coated.
For $v_1(E)$ bar details, see Sheet 12 of 27.
The approach footing maximum applied service bearing pressure (Qmax) = 2.0 ksf.
Cost of excavation for approach footing included with Concrete Structures.
For Porous Granular Embankment (Special) and drainage treatment details, see Sheet 2 of 27.
For additional parapet details, see Sheet 8 and 9 of 27.

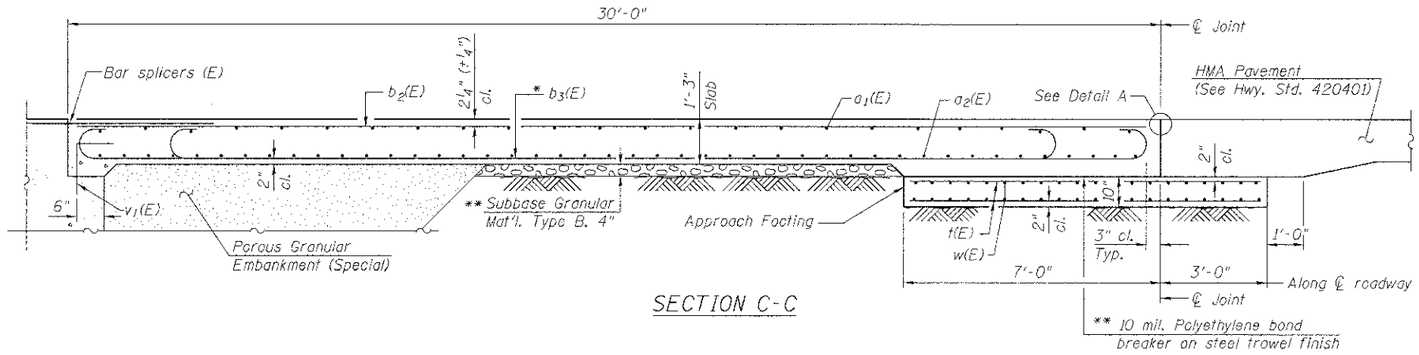

SECTION C-C

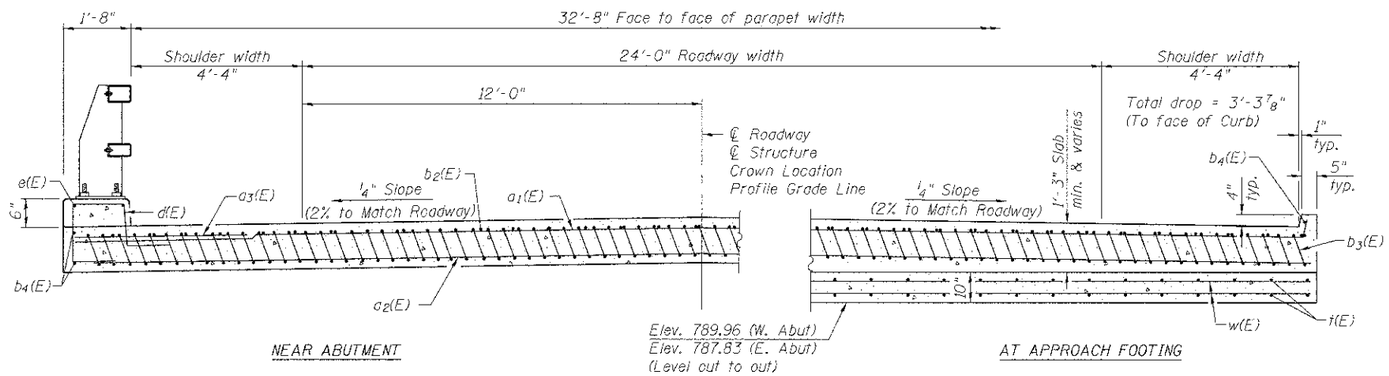

SECTION D-D
(See Plan for dimensions not shown)

* Tilt #9 $b_1(E)$ bars as required to maintain clearance.

** Cost included with Concrete Superstructure.

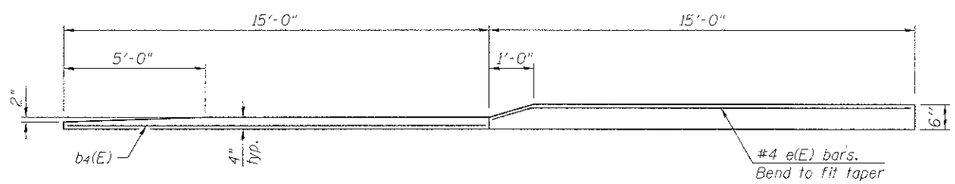

VIEW E-E
At Curb

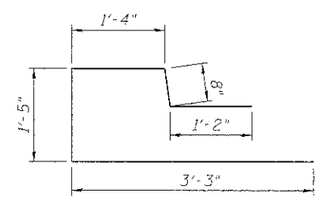

BAR d(E)

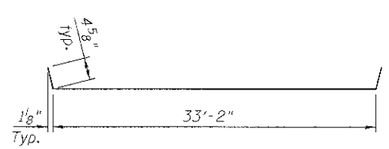

BAR $a_1(E)$

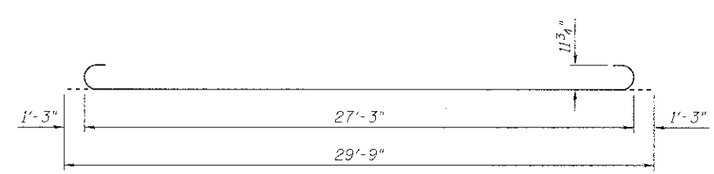

BAR $b_3(E)$

TWO APPROACHES BILL OF MATERIAL

Bar	No.	Size	Length	Shape	
$a_1(E)$	50	#4	34'-0"		
$a_2(E)$	92	#5	33'-4"		
$a_3(E)$	48	#6	6'-6"		
$b_2(E)$	54	#4	29'-8"		
$b_3(E)$	162	#9	29'-9"		
$b_4(E)$	12	#4	14'-8"		
d(E)	84	#5	7'-10"		
e(E)	8	#4	14'-8"		
f(E)	136	#4	9'-8"		
w(E)	80	#5	33'-4"		
Concrete Superstructure			Cu. Yd.	100	
Concrete Structures			Cu. Yd.	21	
Reinforcement Bars, Epoxy Coated			Pound	23,040	***
Reinforcement Bars, Epoxy Coated			Pound	3,660	****
Bridge Deck Grooving			Sq. Yd.	205	
Protective Coat			Sq. Yd.	228	

*** Included in Superstructure
**** Included in Substructure

FILE NAME = w:\pl\6980-6879\6142'00\mmcrea\cadd sheets\structural\056-3192-63666-006-S09.dgn

STRAND ASSOCIATES® 1170 SOUTH HOLBROOK ROAD JOLIET, ILLINOIS 60431 (815) 744-4200 IDFPR NO. 184-001273

USER NAME = brianf	DESIGNED RRD	REVISED -	
	CHECKED AJS	REVISED -	
PLOT SCALE =	DRAWN BJF	REVISED -	
PLOT DATE = 6/23/2012	CHECKED RRD	REVISED -	

MCHENRY COUNTY DIVISION OF TRANSPORTATION
HILL ROAD BRIDGE OVER
NORTH BRANCH NIPPERSINK CREEK

BRIDGE APPROACH SLAB DETAILS (2 OF 2)
STRUCTURE NO. 056-3192
SHEET NO. 7 OF 27 SHEETS

TR	SECTION	COUNTY	TOTAL SHEETS	SHEET NO.
21	08-00356-00-BR	MCHENRY	77	37
		CONTRACT NO. 63666		
		ILLINOIS FED. AID PROJECT		