F.A.P. RTE.	SECTION	COUNTY	TOTAL SHEETS	SHEET NO
885	(107A)B-1	JOHNSON	38	15
STA.		TO STA.		
FED. ROAD DIST. NO.		ILLINOIS	FED. AID PROJECT	

CONTRACT NO. 98776

DETAIL - BITUMINOUS SHOULDER AT GUARDRAIL TERMINAL

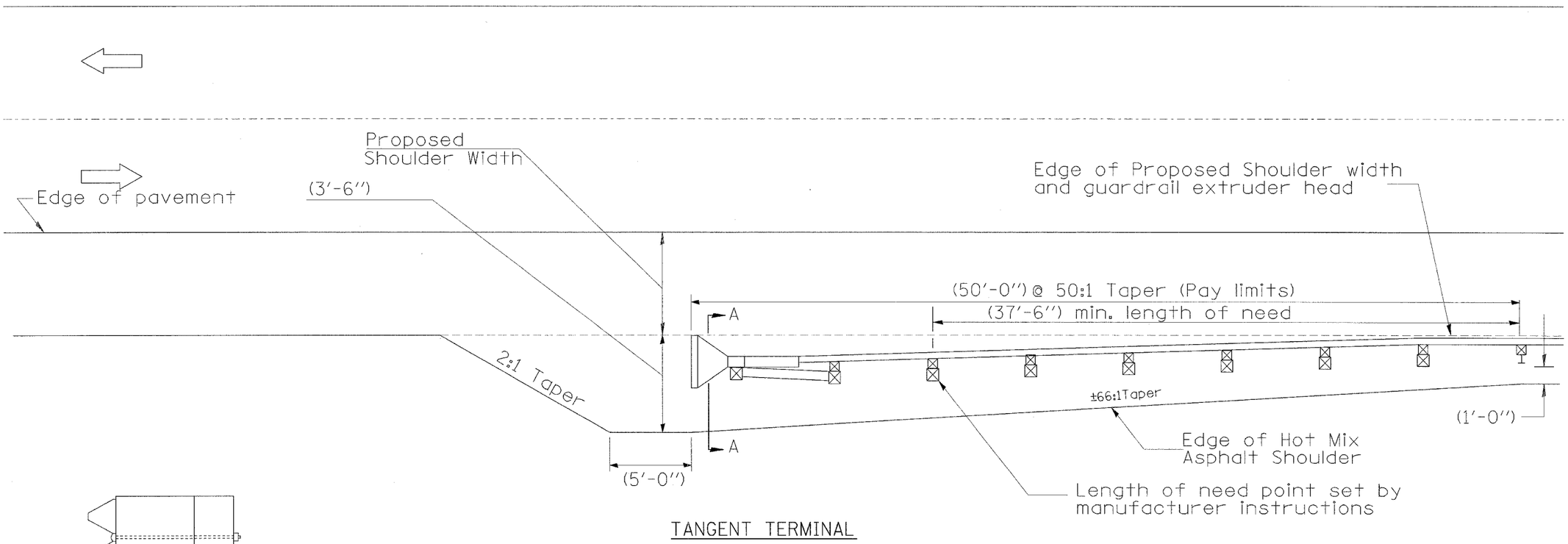

TANGENT TERMINAL

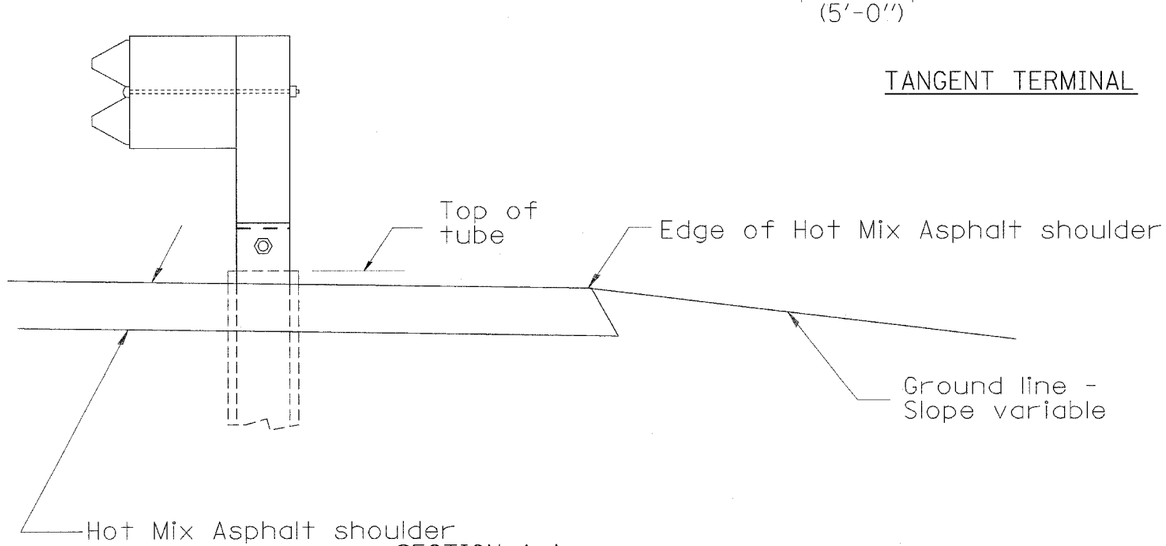

SECTION A-A

(Impact Head omitted for clarity.)

NOTE

50:1 Taper required so the extruder head will not encroach on the shoulder.

PLOT DATE = 7/30/2007
FILE NAME = e:\projects\u782\60803\844-0013.dgn
PLOT SCALE = 50.0000 ' / IN.
USER NAME = haistandfix

HOT-MIX ASPHALT BEHIND TBT TYPE 1 (SPECIAL)